PORTRONICS

VAYU 3.0

Rechargeable Tyre Inflator

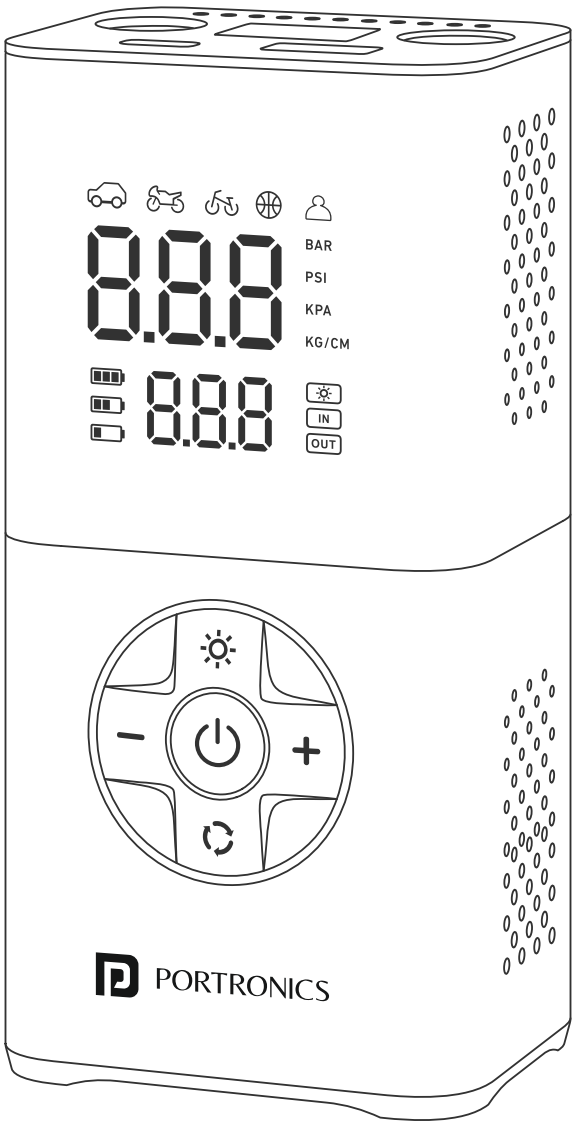

USER MANUAL

WARNING

- Carefully read the instructions before use.
- Check the preset pressure value before inflating. The preset pressure value should match the object to be inflated.
- Keep this product away from flammables and explosive chemicals or objects.
- Avoid storing this product in humid or dusty conditions.
- Avoid putting this product in a place where it can easily fall.
- Keep out of reach of children.
- Do not improperly dispose of this product or expose it to an open flame.
- High temperatures caused by prolonged continuous use may damage the product. Let the pump cool down for 10 minutes after 15 minutes of continuous use.
- Do not use chemical cleaners to clean the pump.

PACKAGE INCLUDES

Tyre Inflator	× 1
Air Hose	× 1
USB Charging Cable	× 1
Air Nozzles	× 4
User Manual	× 1

DIAGRAM

EN

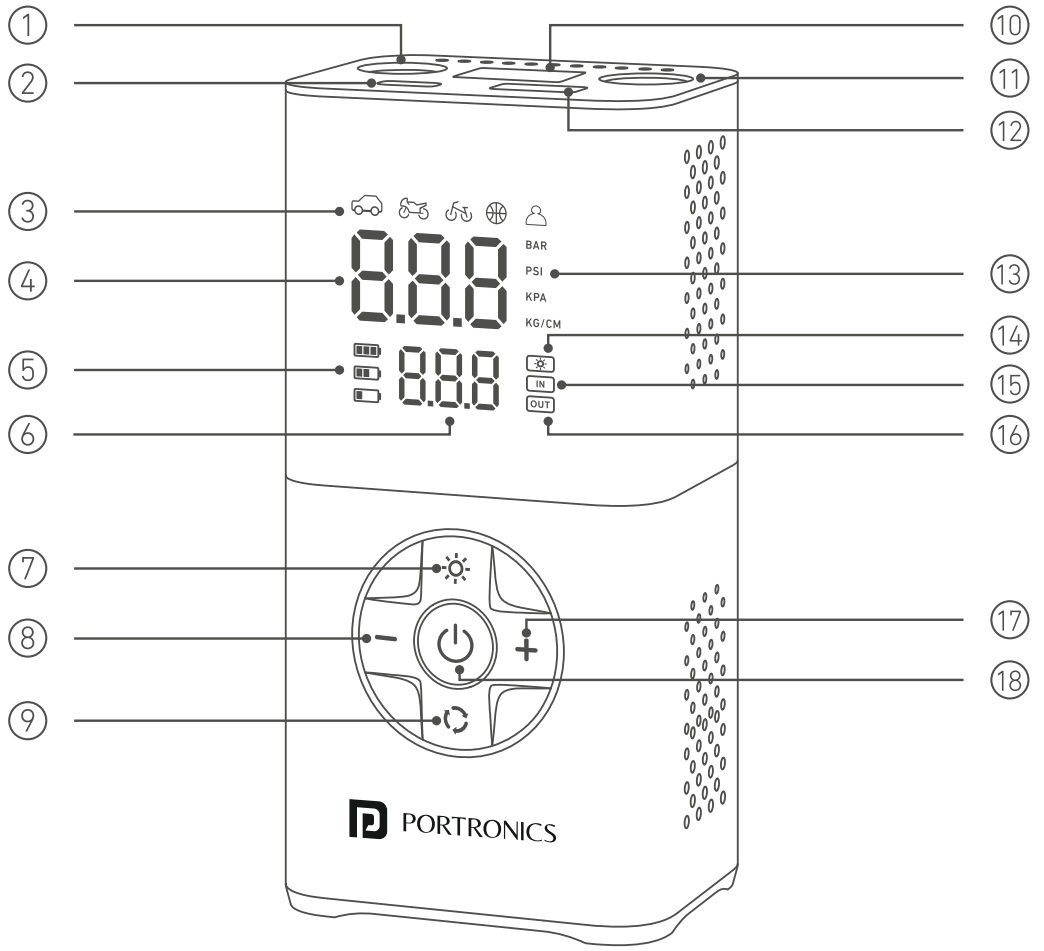

① Air Hose Port
② Type-C Charging Port
③ Inflation Modes
④ Real-Time Pressure Display
⑤ Battery Level Display
⑥ Preset Pressure Value Display
⑦ LED Flashlight Button
⑧ "-" Button (Decrease Pressure)
⑨ Settings Button
⑩ LED Light
⑪ Hose Storage Port
⑫ USB Output Port
⑬ Pressure Units
⑭ Light Icon Display
⑮ Input Charging Icon Display
⑯ Output Charging Icon Display
⑰ "+" Button (Increase Pressure)
⑱ Power Button

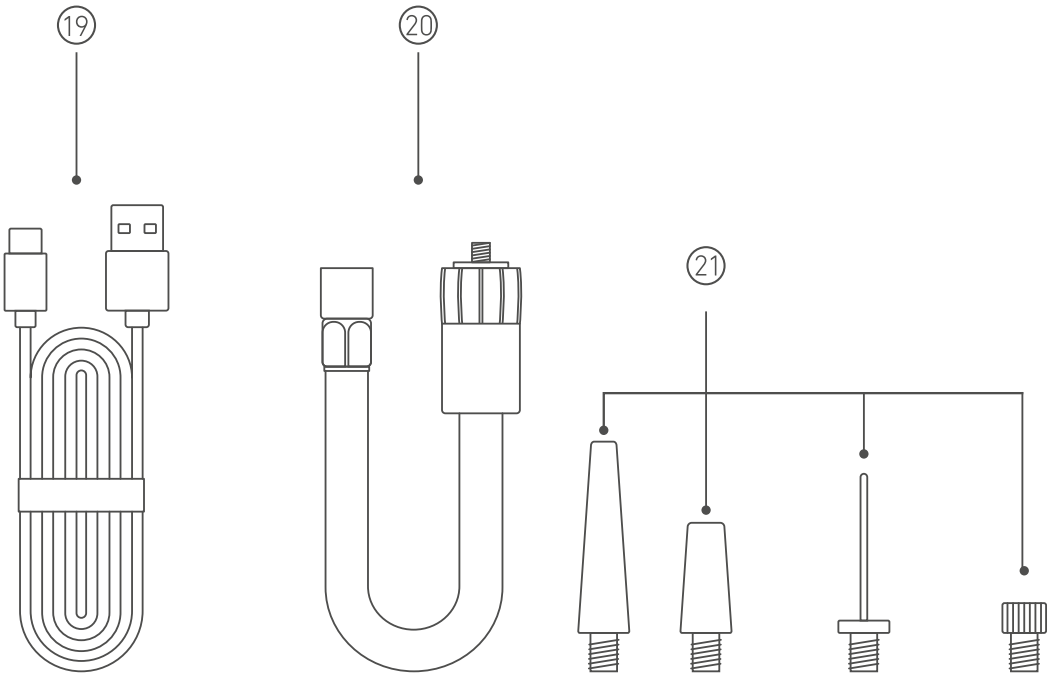

⑲ USB Charging Cable

⑳ Air Hose

㉑ 4 x Air Nozzles

PREPARATION

Charging

- Before initial use, please charge the product with the included Type-C cord (outlet adapter not included).

- Battery level display:
  This icon has three statuses based on the device's battery level: one cell means the pump is < 30% charged, two cells mean 50% charged, and three cells mean the device is fully charged. The battery level icon will flash when the product is charging and stays on when it is fully charged.

EN

INSTRUCTIONS

I. Turn On/Off

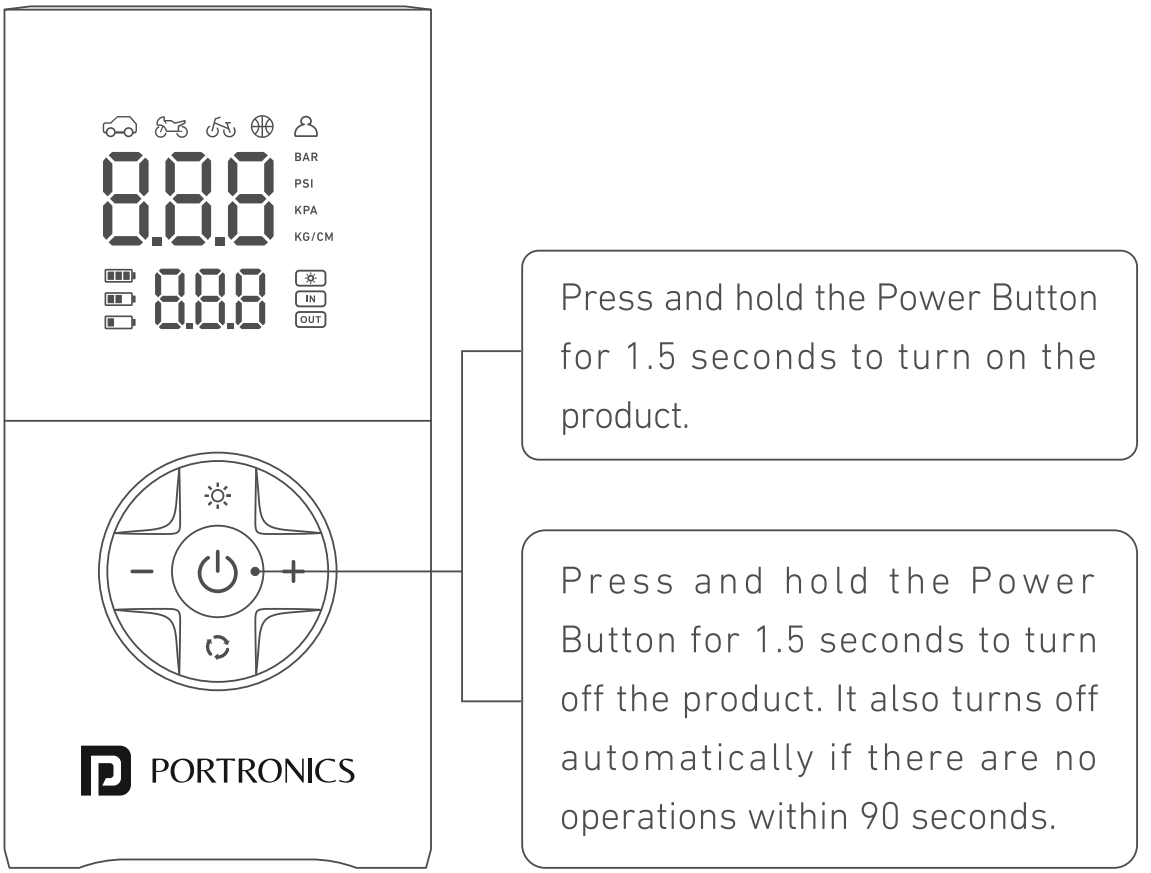

Press and hold the Power Button for 1.5 seconds to turn on the product.

Press and hold the Power Button for 1.5 seconds to turn off the product. It also turns off automatically if there are no operations within 90 seconds.

II. Switch Units/Modes

- Press the Settings Button to switch between the 5 inflation modes: cars, motorcycles, bicycles, basketballs, and custom mode.

EN

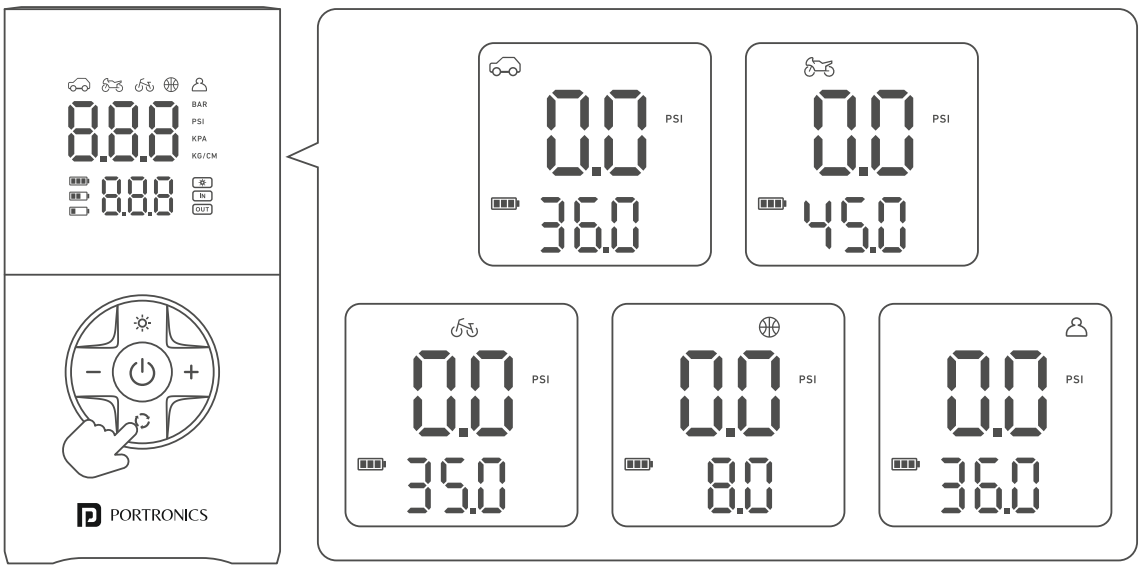

III. Preset the Pressure Value

Press the “+” and “-” Buttons to set the pressure value. Press and hold a button to rapidly change the pressure value. After choosing the desired value, the number will blink three times and be set.

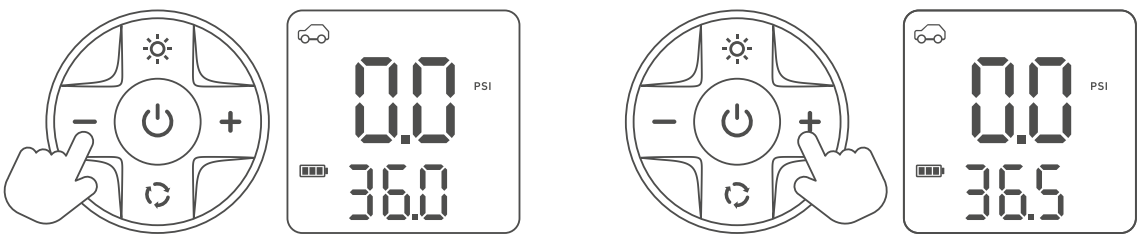

IV. Turn the LED Light On/Off

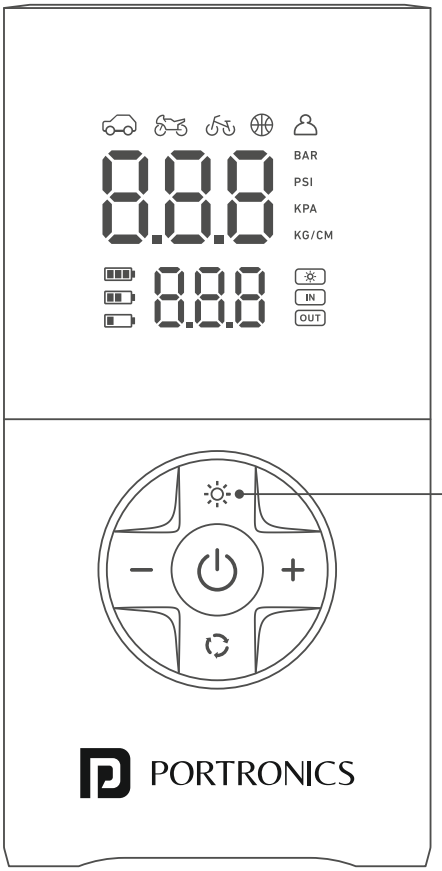

Press the LED Light Button once to turn the light on.

Press the LED Light Button for a second time to activate the slow flashing feature.

Press the LED Light Button for a third time to activate the quick flashing feature.

Press the LED Light Button for a fourth time to turn the light off.

V. Connect the Hose

- Screw the air hose onto the air hose port of the tyre inflator.

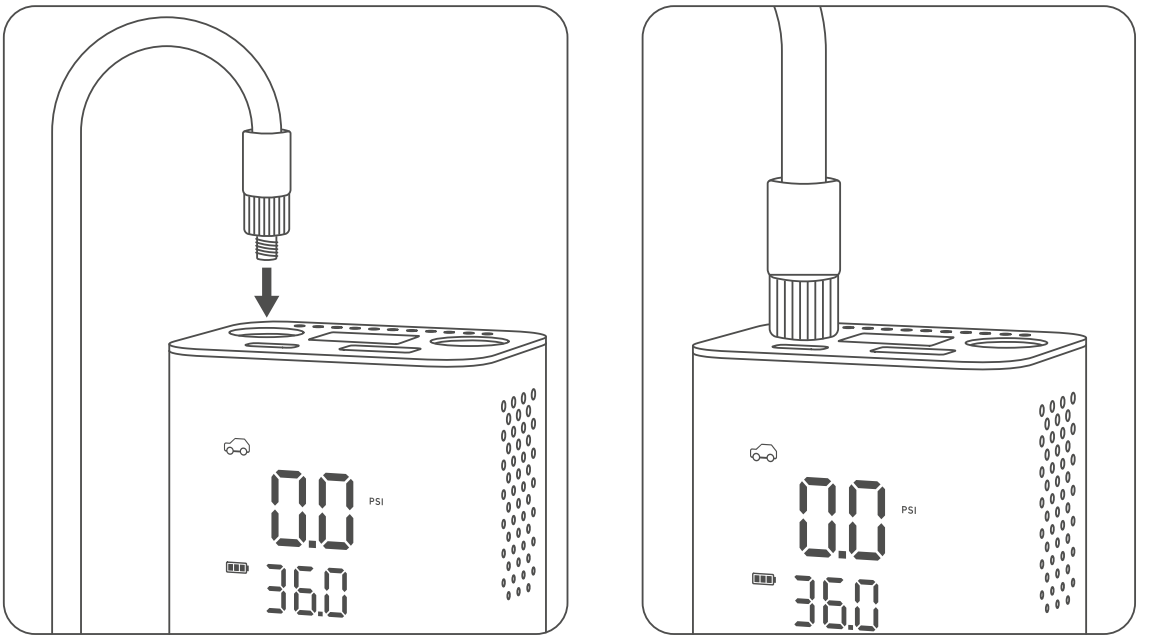

- Remove the valve cap from the tire valve stem and attach the air hose to the valve stem.

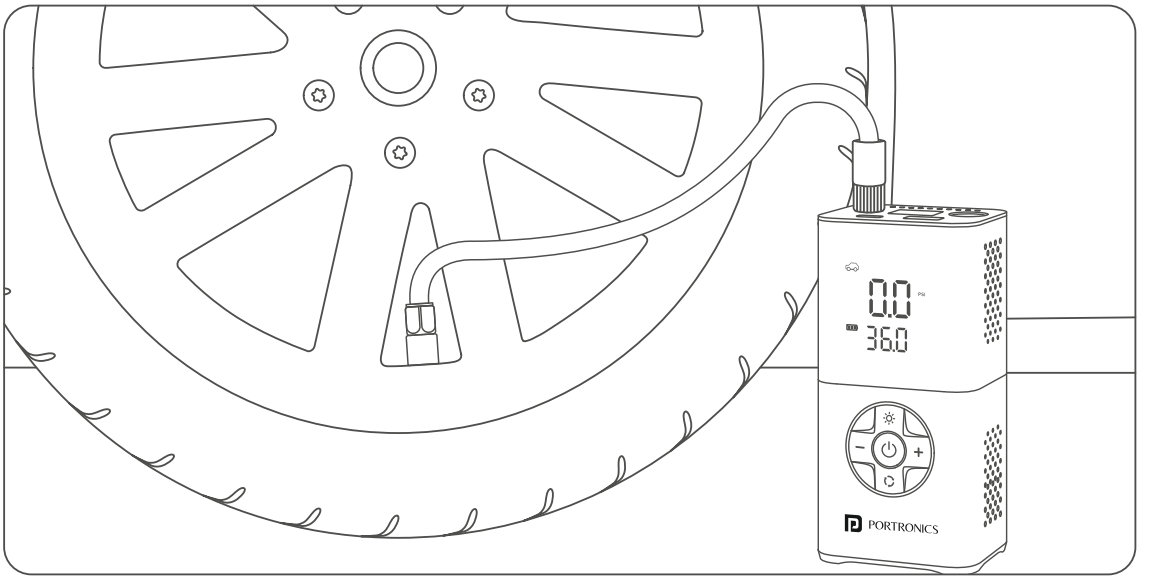

VI. Measure Pressure Value

EN

When the air hose is connected to the inflatables and powered on, the screen will display the inflatable's real-time pressure value.

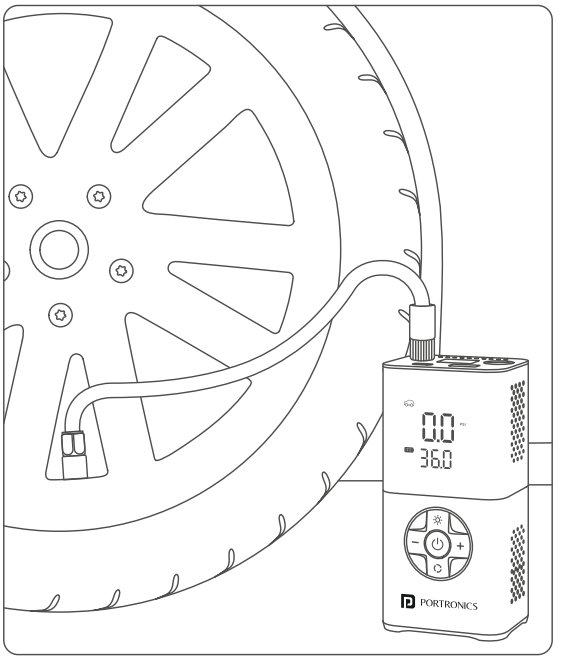

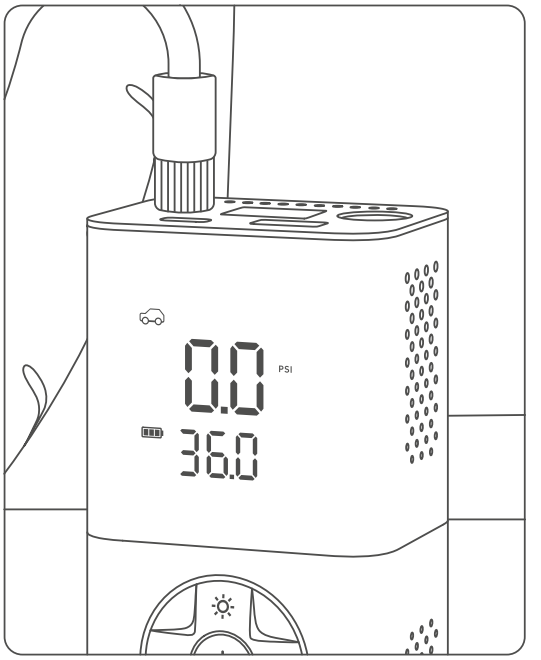

VII. Start Inflation

Press the Power Button to start inflating; the digital screen will display the tire's real-time pressure value. (Note: do not touch the hose during inflation.)

VIII. Stop Inflation

The air pump will automatically stop inflating when it reaches the preset pressure value. You can also press the Power Button to manually stop inflation.

IX. Complete Inflation

- When the inflation is completed, remove the air hose from the tire's valve stem and attach the valve cap back to the tire's valve stem.

- When not in use, store the hose by screwing the air hose onto the hose storage port.

TROUBLESHOOTING/FAQ

- The air pump does not work: Please check the battery level of the product. The lithium battery may discharge when it is not in use.
- Slow inflation: Check if the air hose is correctly connected to the tire's valve stem.
- The air pump will get hot after continuous use, please wait until it cools down before using it again.
- The lithium battery's capacity and life will worsen in low-temperature environments. This is a normal phenomenon of lithium products.

MAINTENANCE

- Store the product in a cool and dry place and avoid direct sunlight.
- Please charge the product to a battery level of 50% ~ 80% before long-term storage. Charge it every 1 month to prolong its battery life.

SPECIFICATIONS

Model	Vayu 3.0
Inflation Speed	17L/Min
Power	50W
Maximum Working Pressure	150PSI
Battery Capacity	4000mAh
Input	5V⎓1A (Type-C)
Output	5V⎓1A (USB)
Inflation Modes	Cars, Motorcycles, Bicycles, Basketballs and Custom
Display Units	PSI, Bar, kPa, kg/cm^2
Functions	Inflation, Illumination, SOS,
Inflation Hose Length	25cm
USB Charging Cord Length	89.916 cm
Dimensions	13.4 × 6.6 × 5cm